NOTES:

1. THE EXISTING CONDITIONS AND DIMENSIONS ARE SHOWN AS REFERENCE ONLY. THE CONTRACTOR SHALL FIELD VERIFY EXISTING CONDITIONS AND DIMENSIONS AS NECESSARY.
2. DISCONNECT SUCTION AND DISCHARGE PIPING, ELECTRICAL AND CONTROL WIRING AND REMOVE THE EXISTING PUMP STATION IN IT'S ENTIRETY. THE EXISTING STATION IS A PREPACKAGED ABOVE GRADE VACUUM PRIME SYSTEM (USEMCO SERIAL NUMBER 5379) WITH FIBERGLASS ENCLOSURE. THE STATION'S FOOTPRINT IS APPROXIMATELY 73 BY 67 INCHES.
3. THE NEW STATION SHALL BE DESIGNED TO UTILIZE THE EXISTING OPENINGS ON THE VAULT EXACTLY. IT IS THE RESPONSIBILITY OF THE STATION SUPPLIER TO VERIFY THESE DIMENSIONS.
4. DISCONNECT THE EXISTING DISCHARGE PIPING FROM THE FLANGE OF THE ELBOW IN THE VAULT. CONNECT THE DISCHARGE PIPE FURNISHED WITH THE STATION WITH RESTRAINED FLANGE ADAPTOR. ADD FLANGED SPOOL, IF NECESSARY.
5. REMOVE THE 4 x 6 REDUCERS ON THE EXISTING SUCTION PIPES IN THE VAULT. CONNECT THE STATION SUCTION PIPES TO EXISTING 6-INCH FLANGED SUCTION PIPES WITH FLANGE ADAPTOR. ADD FLANGED SPOOL, IF NECESSARY.
6. THE EXISTING SUCTION AND DISCHARGE PIPING ARE SUPPORTED FROM THE WETWELL (VAULT) ROOF WITH TIE RODS. REMOVE AND REINSTALL NEW SUPPORTS.

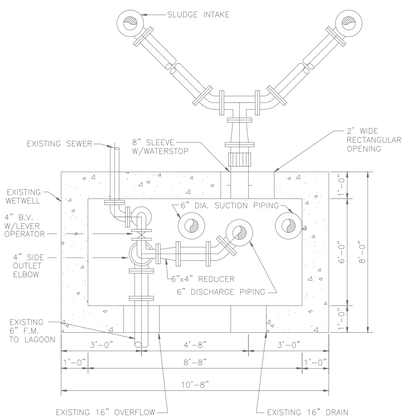

SECTION C–C
N.T.S.

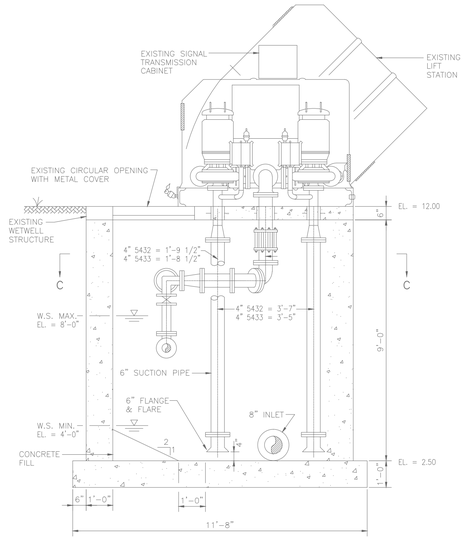

SECTION A–A
N.T.S.

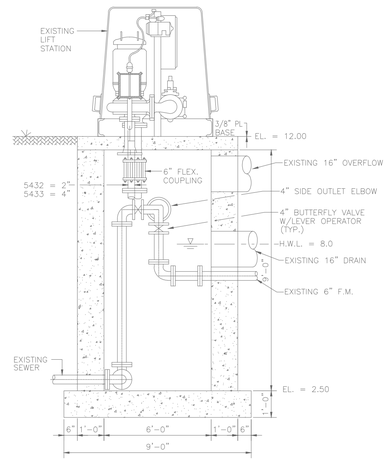

SECTION B–B
N.T.S.

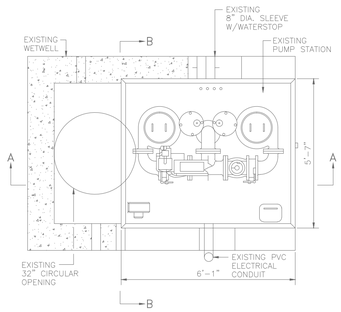

PLAN
N.T.S.

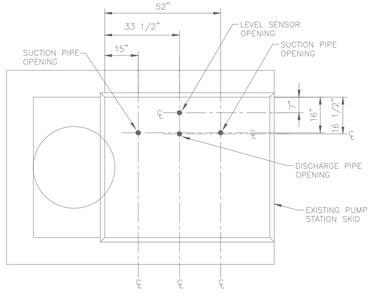

EXISTING OPENINGS
N.T.S.

EXISTING LOWER LAGOON SLUDGE PUMP STATION
N.T.S.

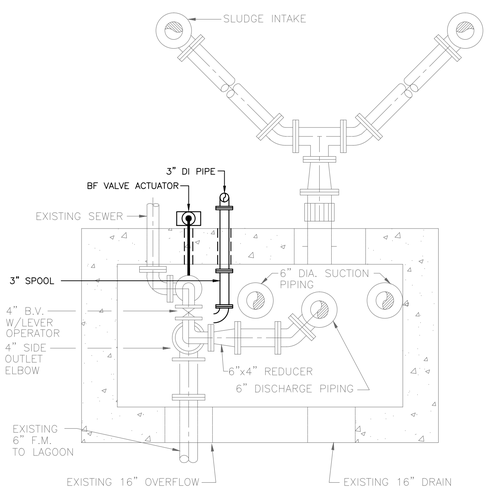

SECTION C–C
N.T.S.

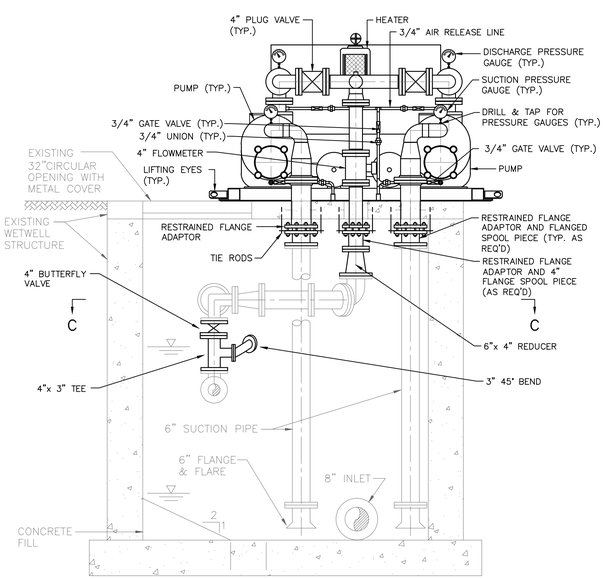

SECTION A–A
N.T.S.

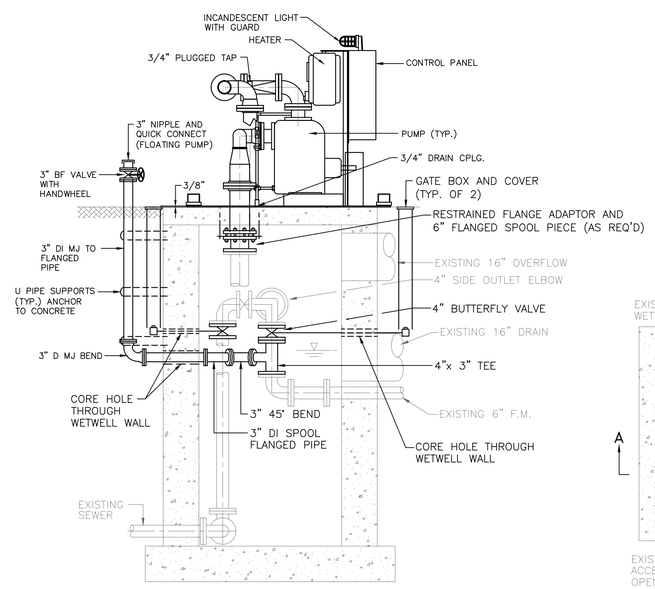

SECTION B–B
N.T.S.

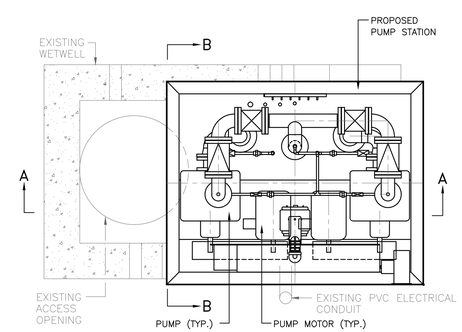

PLAN
N.T.S.

PROPOSED LOWER LAGOON SLUDGE PUMP STATION
N.T.S.

NO.	REVISIONS	BY	DATE

FULL SIZE DRAWING = 4"

AQUAGENICS INCORPORATED
WATER & WASTEWATER ENGINEERING SERVICES
215 SALEM STREET WOBURN, MA 01801

LOWER LAGOON SLUDGE PUMP STATION
PLANS, SECTIONS AND DETAILS
SWTP WASTE REDUCTION
EXETER, NEW HAMPSHIRE

DESIGNED BY AP	DWG SCALE NONE
DRAWN BY	CONTRACT NO XX-XX
CHECKED BY LJM	DATE DEC 2012

M–1

SHEET 1 OF 1